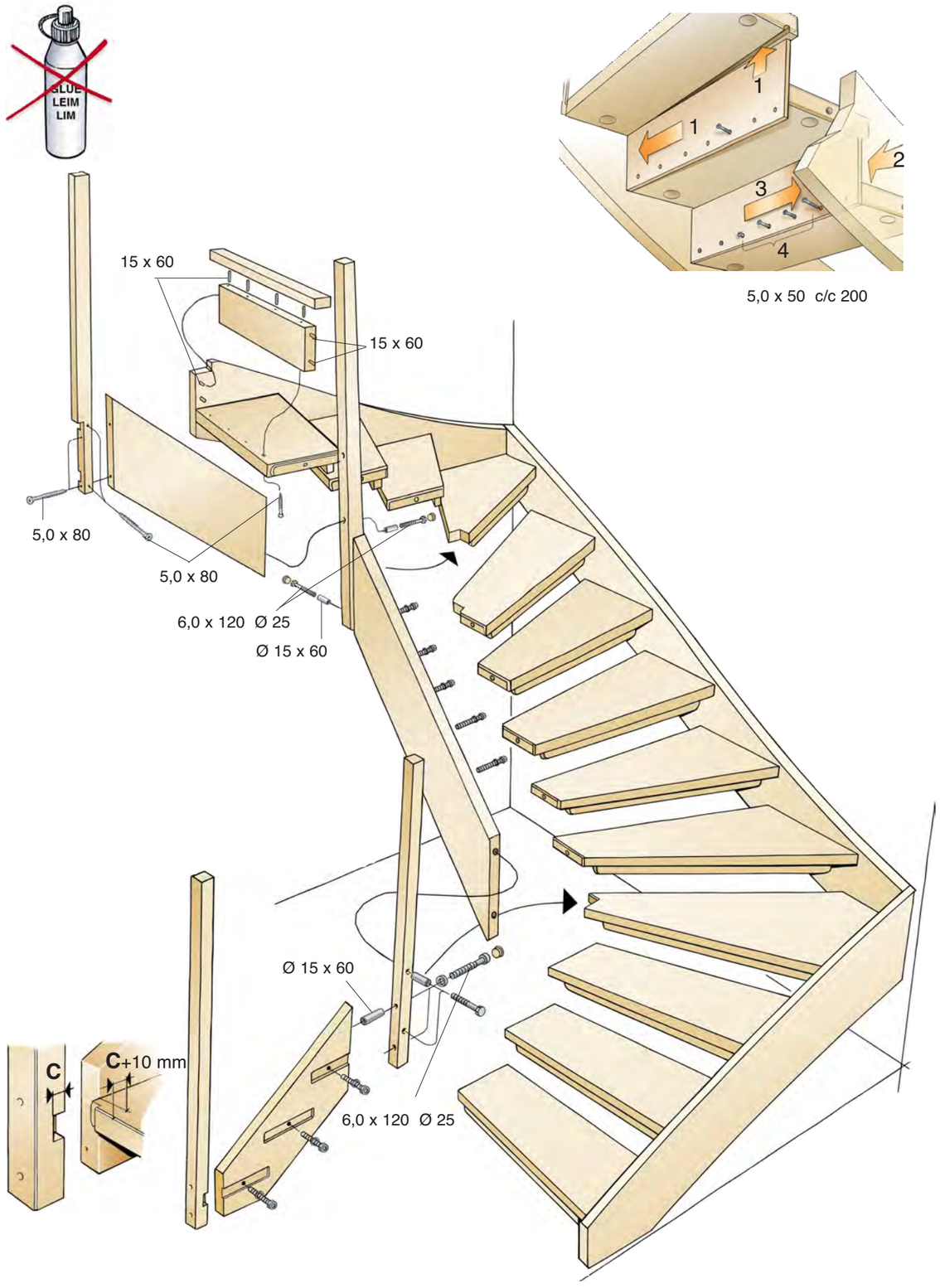

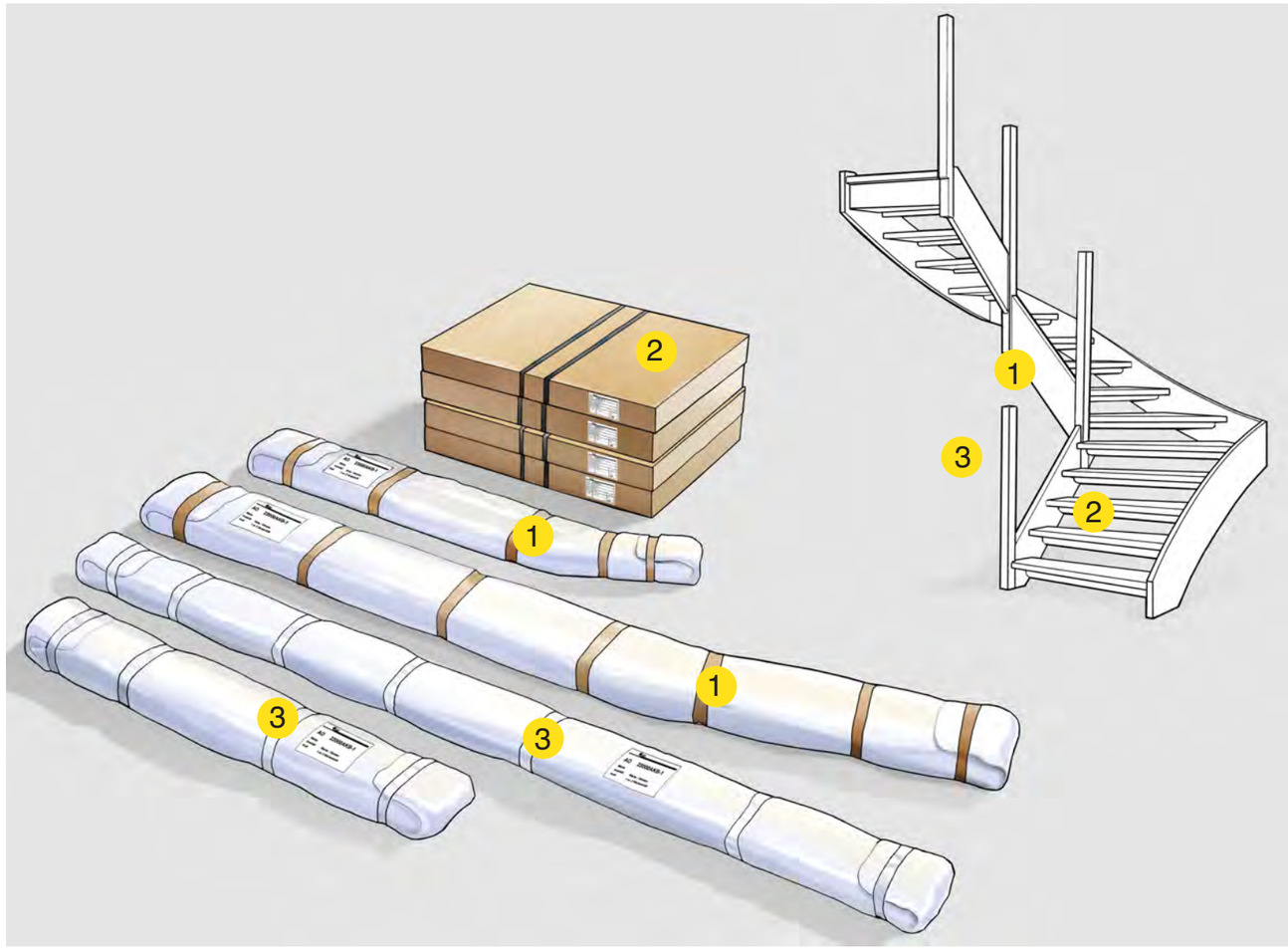

MONTERINGSANVISNING

Trappa med stolpar, Mountin®

MONTAGEANLEITUNG

Treppe mit Pfosten, Mountin®

ASSEMBLY INSTRUCTIONS

Staircase with newels, Mountin®

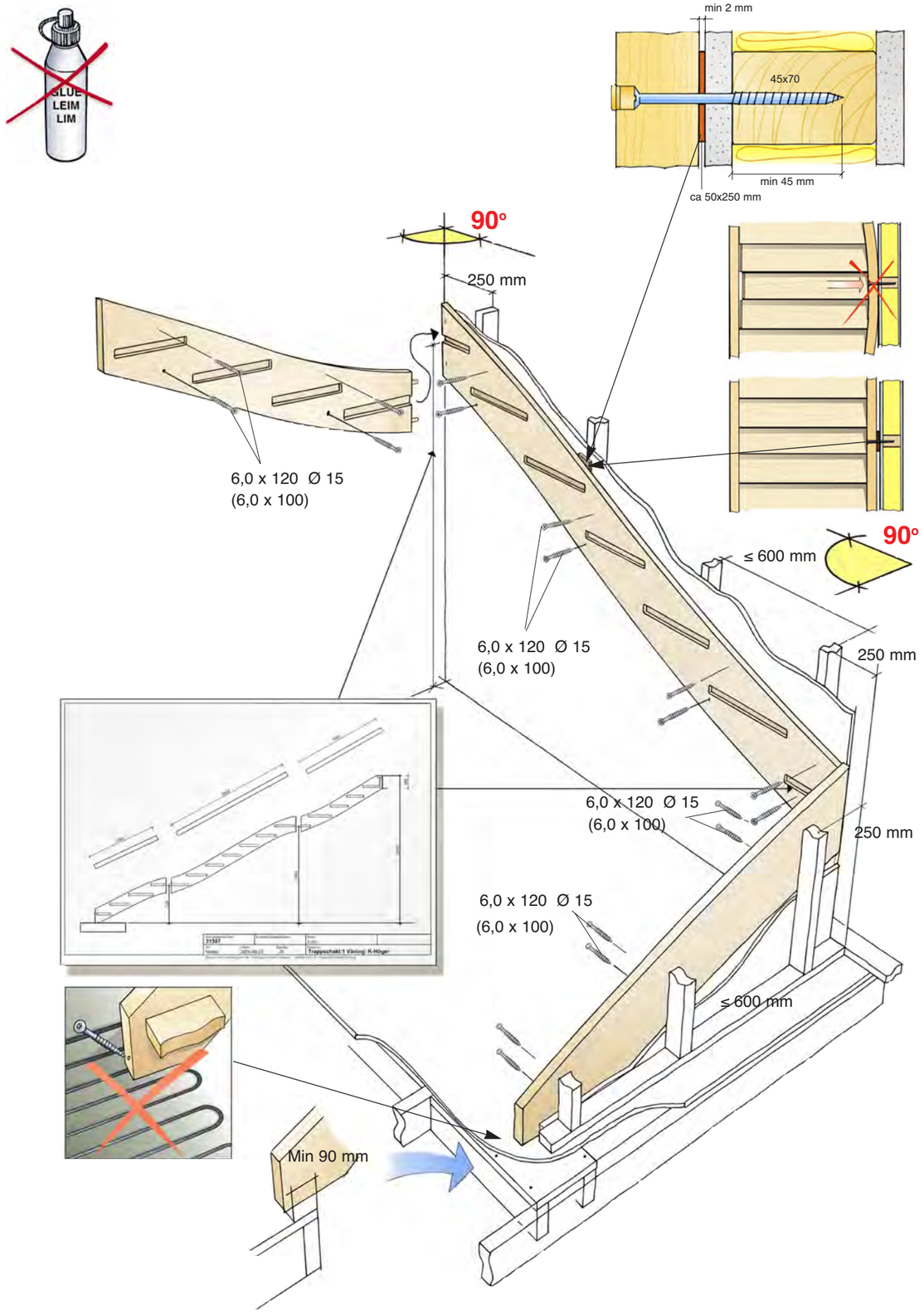
GLUE
LEIM
LIM
min 2 mm
45x70
min 45 mm
ca 50x250 mm
90°
250 mm
6,0 x 120 Ø 15
(6,0 x 100)
≤ 600 mm
90°
6,0 x 120 Ø 15
(6,0 x 100)
250 mm
6,0 x 120 Ø 15
(6,0 x 100)
250 mm
6,0 x 120 Ø 15
(6,0 x 100)
≤ 600 mm
Min 90 mm

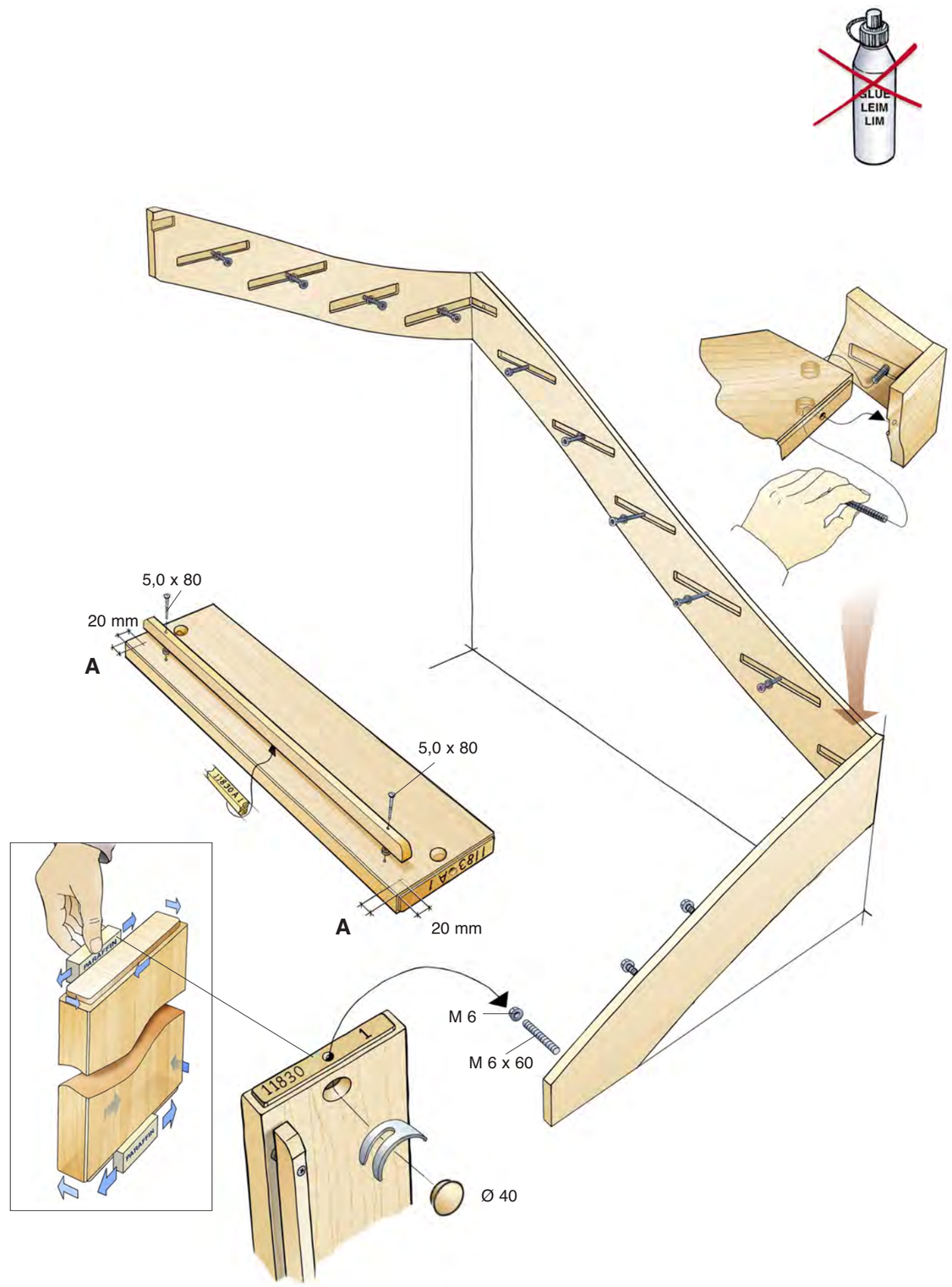
GLUE
LEIM
LIM
5,0 x 80
20 mm
A
5,0 x 80
A
20 mm
PARAFFIN
M 6
M 6 x 60
11830
Ø 40